# MODEL - K-3000

Timer-Random

# SPANKER MACHINE

## Instruction Manual

PLEASE READ ALL INSTRUCTIONS BEFORE USING THIS APPLIANCE

# IMPORTANT SAFEGUARDS

**READ ALL INSTRUCTIONS BEFORE USING THE DEVICE.**

When using electrical appliances, basic safety precautions should always be followed to reduce the risk of fire, electric shock and/or injury to persons, including the following:

- To protect against risk of electrical shock DO NOT immerse the Power adapter cord or Appliance in water or any other liquid.
- Unplug your appliance from the outlet when not in use.
- Avoid contacting moving parts
- DO NOT operate any appliance with a damaged cord or plug or after the appliance malfunctions, or is dropped or damaged in any manner.
- The use of attachments not recommended may cause fire, electric shock, or injury.
- Never leave an appliance unattended while in use.
- Keep hands and utensils away from the beater or any other attachment that is in use to reduce the risk of personal injury or damage.
- Always use the Appliance on a dry, level surface
- DO NOT operate continuously for more than 10 minutes when working on max power.
- Keep hands, hair, clothing, and other utensils away from beater during operation to reduce the risk of injury to persons and/or damage to the appliance.
- Ensure fingers are kept well away from moving beater.
- People under 18 years of age not allowed to buy or use this appliance.
- The way of using this appliance is a personal reponsablitily, and we will not be held responsible for the damage to persons, or objects resulting from the use of the appliance, or unauthorized alterations.

**Use only the 12v. Power adapter supplied.**

The device uses a 12v. 110/220v adapter supply specific for this unit.

DON'T START THE MACHINE WITHOUT ANY IMPLEMENT AT HIGH POWER LEVELS

The machine must not be operated without an implement with the selector power set at high levels (5-10)The shank, or the machine's housing could be broken.

THE IMPLEMENT MUST REACH THE "TARGET" BEFORE HITS THE STOPPER

# DESCRIPTION OF THE APPLIANCE

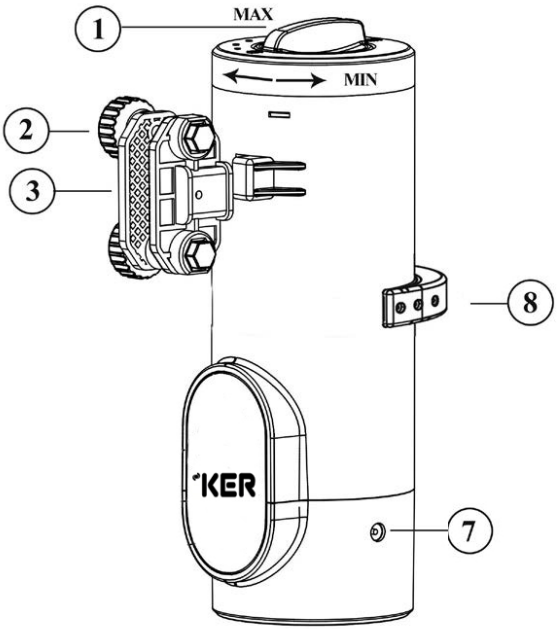


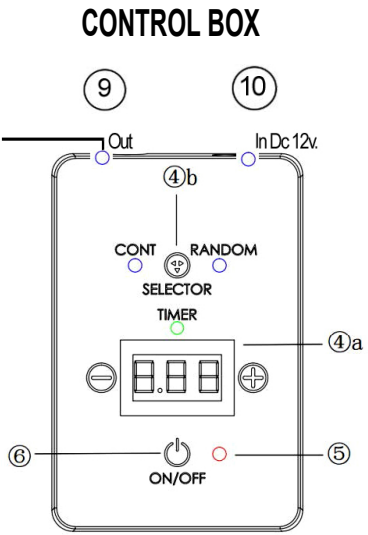


① Power selector control knob . Min/Max
② Wings screws
③ Kneader-coupler/Beater
④ a : Timer Display
b: Mode button (Cont-Random-Min.)
⑤ Power led On Light
⑥ Power ON/OFF
⑦ 12v. Dc-in for adapter plug
⑧ Coupler for Arm-extensor
⑨ Control Box out to machine IN (7)
⑩ Control Box IN from adapter 12.v

# ARM EXTENSOR MOUNTING

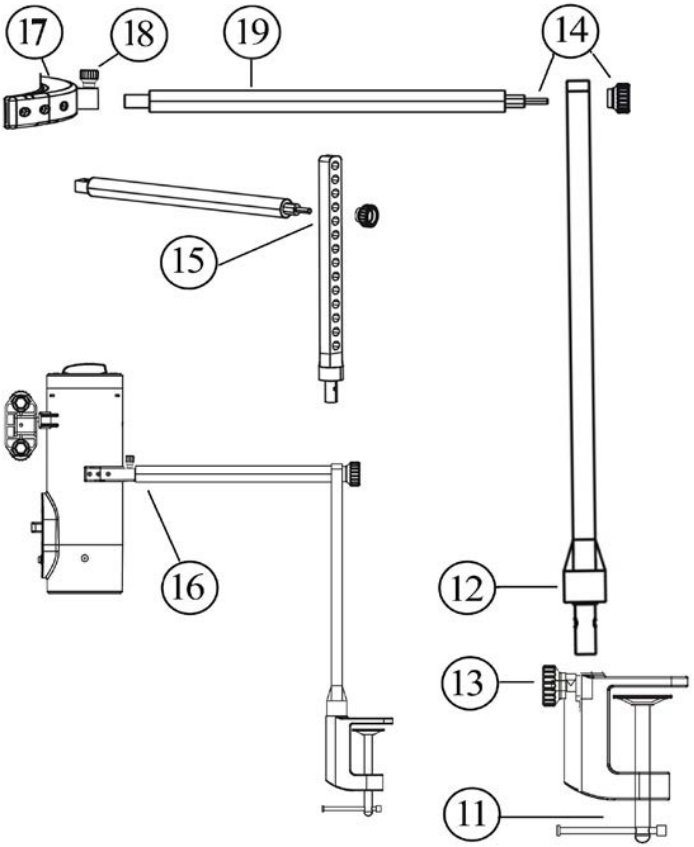


- Screw the tube (**19**) into the machine´s coupler (**17**)
- Tight the clamping screw (1**8**)
- Place the clamp in the working surface and fix it (11), making sure it is properly fixed to the surface.
- Insert the tube (12) in the clamp and secure it with the screw (13)
- Insert the tube´s thread **(1**9) with the coupled machine, through the hole of tube 2 **(12)** and secure it with the screw (14)
- (16), The device is Assembled, now we can vary the height by the extensor system if needed (15)

# INSTRUCCTIONS FOR USE

*BEFORE USING SPANKER MACHINE*

**-Set the power selector control Knob to Min position (P1)**
**-Assemble the arm extensor (Page 3)**
**-Never use the device without the arm extensor locked**

**(1) Power selector control Knob. Min/Max.**
Select the power required by pressing the Knob down and turning towards Min/Max positions.
It is recommended to set the power selector control Knob to Min position before start working.

**(3) Kneader/coupler**
Adjust the wing screws (2) to couple the implements to the Machine.

## Starting

-Place the implements to the coupler (3) and tight the wings screws (2) till they have been locked firmly.

-**Select the desired power by pressing the Knob(1)down and turning towards Min/Max**

-**Connect the adapter and control box**,

-Connect the cable from the control Box out (9), to the 12v. Dc female machine IN (7)

-Connect the cable from the 12v. adapter to the Control box IN (10)

-Plug the supplied adapter to Mains(110/220v.)

**Press (4 b )**, to select between the 3 modes (**CONTinouş RANDOM, TIMER**), the corresponding indicator light will be turned on.

**Continiuos mode**, the machine will work continuosly
**Random mode**, the machine will work in Random
**Timer Mode,** the machine will work the selected time (0-5 minutes max)

- CONT mode ,the light of CONT will be on. **Press (6 ),** to turn on/off the machine
- RANDOM mode, the light of RANDOM will be on.**Press (6 )** to turn on/off the machine
- TIMER mode : **Press (+)** ,10 seconds will be increased, the Max. time is 5 minutes .
- **Press (-)**, 10 seconds will be decreased
- When the desired time is selected **Press (6 )** to turn on/off the machine

# ADVICES

Don't start the machine without any implement at high power level (5-10),
The shank, or the machine's housing could be broken.

**THE IMPLEMENT MUST REACH THE "TARGET" BEFORE HITS THE STOPPER**

START USING THE MACHINE IN MIN POSITIONS (P1)
It is recommended to start using Minimum power before we get used to Machine´s control.

RECOMMENDED MAXIMUM LOAD WEIGHT 100- **120** grms.

The small but robust *Spanker Machine* is designed for small domestic implements, it is not recommended to overload it with heavy weight.

ENSURE THE CLAMP SYSTEM STRONGLY TO A FIXED SURFACE. P(11) P(13)
We must ensure a strong grip on the surface by tightening the Knob screws from the clamp system, to a table or surface safe and objects free.

Anti Slip Mat, Carpet Rug Underlayer is recomended for some surfaces, when the clamp system slips.

ENSURE FIRMLY THE INSTRUMENT-IMPLEMENT TO THE COUPLER. P(2). P(3)
Screw strongly the coupler´s knobs, ensuring that the implement being used has been strongly hold.

HEIGHT VARIATION WITH THE EXTENSION ARM. .P (15)
We can vary the height using different extender arm holes.

ANGLE VARIATION WITH EXTENSION ARM. .P (15)

We can vary the angle of impact by the extender arm octagonal holes.

# Especifications

- ∉ Stainless steal mounting arms
- Measures 22 x 8 cm.
- ∉ CE & Rohs certificates
- Very easy to use mount and store.
- 10 Strike intensity positions- Soft-medium-Hard
- Timer (minutes spanking)
- Different angles of impact
- 12 V. Power Adapter Dc- 110/220v.
- Fastening system to any surface included.

# Anti Slip Mat
# Carpet Rug Underlayer

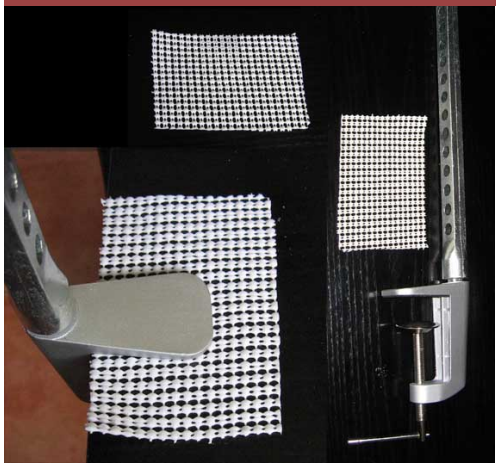

Anti Slip Mat, Carpet Rug Underlayer is recomended for some surfaces, when the clamp system slips.

# MODEL - K-3000

Timer-Random

# SPANKER MACHINE

## Instruction Manual

PLEASE READ ALL INSTRUCTIONS BEFORE USING THIS APPLIANCE